Staff Summary Report

Tempe

Hearing Officer Hearing Date: March 2, 2010 Agenda Item Number: 6

SUBJECT: This is a public hearing for a request by CLEARWIRE – AZ- PHX0509B – APS BUTTE (PL090491) located at 1406 East University Drive for one (1) use permit.

DOCUMENT NAME: 20100302dsdp01 PLANNED DEVELOPMENT (0406)

COMMENTS: Request by CLEARWIRE – AZ – PHX0509B – APS BUTTE (PL090491) (Rulon Anderson/Clearwire, applicant; APS, property owner) located at 1406 East University Drive in the GID, General Industrial District for:

ZUP10009 Use permit to allow the expansion of an existing monopole including an increase in the overall height from sixty-three feet seven inches (63'-7") to seventy feet eleven inches (70'-11") and the addition of three (3) antenna arrays with microwave dishes and radio transmitters.

PREPARED BY: Derek Partridge, Planner I (480-350-8867)

REVIEWED BY: Steve Abrahamson, Planning & Zoning Coordinator (480-350-8359) SEA

LEGAL REVIEW BY: N/A

DEPARTMENT REVIEW BY: N/A

FISCAL NOTE: N/A

RECOMMENDATION: Staff – Approval, subject to conditions

ADDITIONAL INFO: The applicant is requesting a use permit to allow three (3) antenna arrays with microwave dishes and radio transmitters at the height of seventy feet eleven inches (70'-11") on an existing power utility pole on the APS site. The property is located at 1406 East University Drive in the GID, General Industrial District. Staff is in support of the request. To date, no public input has been received.

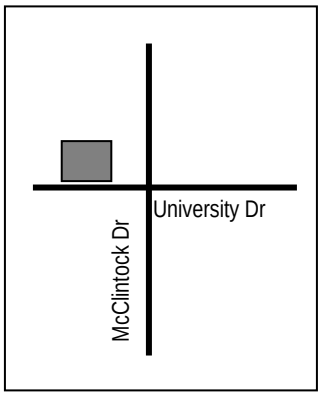

PAGES:

1. List of Attachments
2. Comments;
3. Reasons for Approval; Conditions of Approval; History & Facts/Description; Zoning & Development Code Reference

ATTACHMENTS:

1. Location Map(s)
2. Aerial Photo(s)
3-4. Letter of Intent
5-10. Plans
11. Photo Simulation
12. Staff Photograph(s)

COMMENTS:

The applicant, Rulon Anderson, is requesting a use permit to allow the addition of three (3) antenna arrays, microwave dishes and radio transmitters on an existing utility pole on the APS site. The property is currently a utility use, with several wireless carriers located on site. The additional equipment associated with the expansion will be placed in within a new enclosed wireless compound.

The character of the surrounding area is primarily industrial, commercial and utility. The existing pole will remain as is with the addition of the proposed antenna arrays, microwave dishes and radio transmitters. Staff is supportive of the proposed addition to the existing pole.

The applicant's proposal is to co-locate on an existing site, therefore, minimizing the impact on nearby neighborhoods. To date, no public input has been received.

Use Permit

The Zoning and Development Code requires a use permit for a wireless telecommunications antenna in all allowable zoning districts including the GID, General Industrial District. This use permit request meets all applicable tests in the following manner:

a. Any significant increase in vehicular or pedestrian traffic in adjacent areas;
   - There will be no significant increase in vehicular or pedestrian traffic in adjacent areas.

b. Nuisance arising from the emission of odor, dust, gas, noise, vibration, smoke, heat, or glare at a level exceeding that of ambient conditions;
   - As the proposal is for a wireless antenna; there should be no nuisances.

c. Contribution to the deterioration of the neighborhood or the downgrading of property values which, is in conflict with goals, objectives or policies for rehabilitation, redevelopment, or conservation as set forth in the city's adopted plans or General Plan.
   - There is no evidence that supports a downgrading of surrounding property values. The monopole exists today and has not been proven a detriment to the surrounding neighborhood.

d. Compatibility with existing surrounding structures and uses;
   - The proposed use appears to be compatible with surrounding the uses.

e. Adequate control of disruptive behavior both inside and outside the premises, which may create a nuisance to the surrounding area or general public.
   - A wireless communication tower should not attract disruptive behaviors; the facility will be fully screened and adequately controlled.

Conclusion

Staff recommends approval of the use permit subject to conditions.

REASON(S) FOR APPROVAL:

1. No apparent nuisance resulting from noise, smoke, odor, dust, vibration, or glare.
2. No apparent hazards to persons or property from possible explosion, contamination, fire or flood.
3. Traffic generated by this use should not be excessive.
4. The use appears to be compatible with the building, site and adjacent property.
5. Approval of the use permit will not be materially detrimental to persons residing or working in the vicinity, to adjacent property, to the neighborhood or the public welfare in general.

SHOULD THE HEARING OFFICER ELECT TO TAKE AFFIRMATIVE ACTION ON THE REQUEST, THE FOLLOWING CONDITIONS OF APPROVAL SHOULD APPLY.

CONDITION(S) OF APPROVAL:

1. Obtain all necessary clearances from the Building Safety Division.

2. The equipment on the existing pole shall be mounted as a maximum height of 70'-11" (seventy feet eleven inches).

3. Any intensification or expansion of use will require a new use permit.

4. A weather resistant emergency contact informational sign shall be posted on the site and shall be visible to the public.

5. The wireless device shall be removed within thirty (30) days of discontinuance of use.

HISTORY & FACTS: None pertinent to this case

DESCRIPTION:
Owner – Arizona Public Service (APS)
Applicant – Rulon Anderson/Clearwire
Existing Zoning – GID, General Industrial District

ZONING AND DEVELOPMENT CODE REFERENCE:
Part 3, Chapter 2, Section 3-302 – Permitted Uses in Office/Industrial Districts
Part 3, Chapter 4, Section 3-421 – Wireless Telecommunications Facilities
Part 4, Chapter 4, Section 4-405 – Mechanical Equipment
Part 6, Chapter 3, Section 6-308 – Use Permit

Tempe

CLEARWIRE - AZ - PHX0509B - APS BUTTE

PL090491

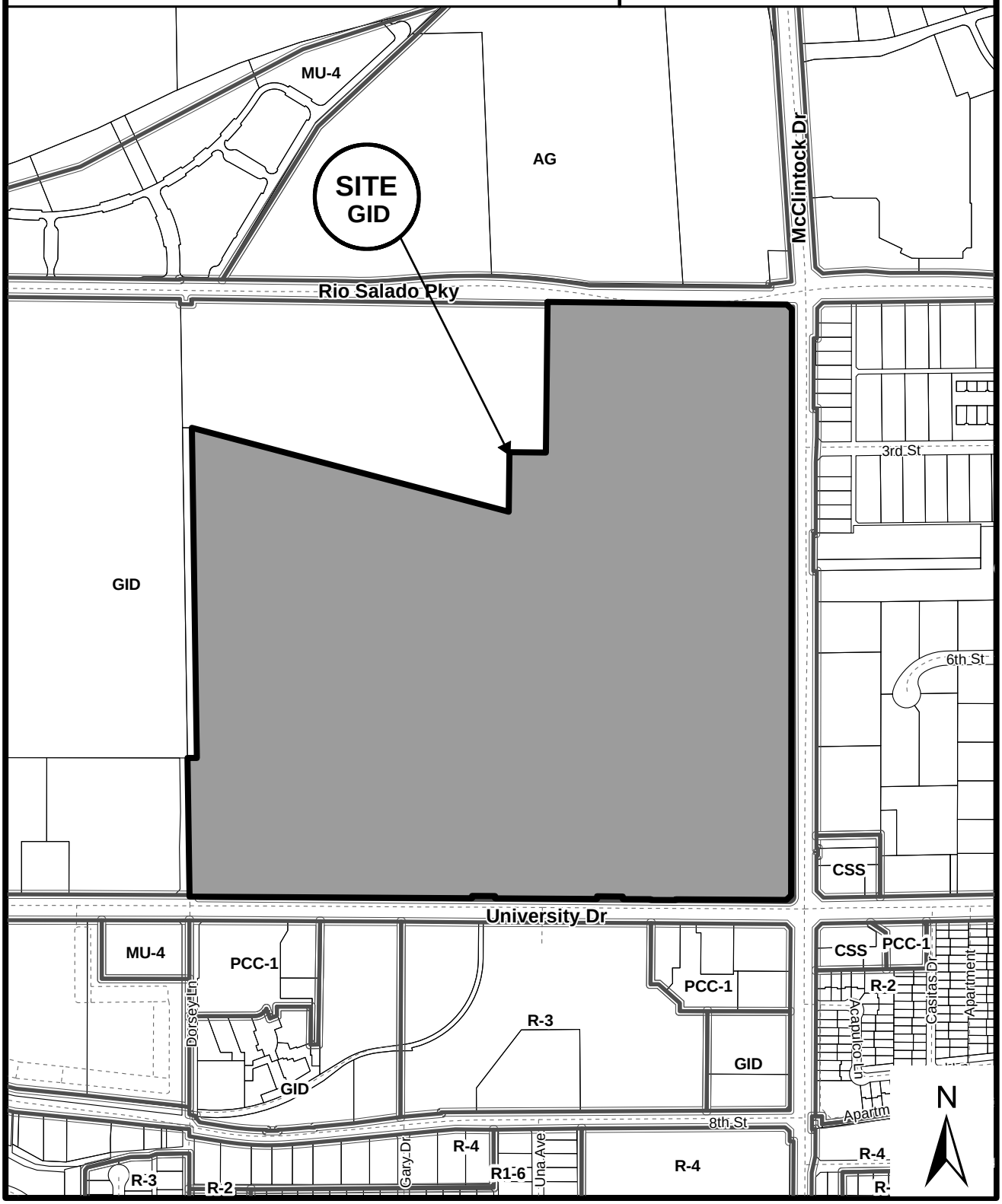

Location Map

CLEARWIRE - AZ - PHX0509B - APS BUTTE (PL090491)

Letter of Explanation

AZ-PHX0509 APS Butte Sub

Here is an overview of Clearwires technology:

> Clearwire is a broadband wireless internet provider that specializes in deploying WiMAX technology. Clearwire's radio's are 5 Watts compared to 20 Watts on Sprint's CMDA radios or 36 Watts on Nextel's radios. Compared to conventional wireless carriers, our radio output is a fraction of what they transmit. As the power is being transmitted out of the radio, it will incur loss through the connectors and coax as it makes its way to the antenna. The dissipated signal is then compensated by a "gain" associated with the antenna where the power is radiated through an array element that shapes the RF. The shaping of the RF is directional and narrows the scope of the field to prevent "spray". This can be equated to a sprinkler head that dispenses the water uniformly across the lawn.
>
> The microwave aspect of our technology is the backbone of our network. These radios transmit less than 0.5 Watt. It will also incur connector and line losses before the antenna dish compensates that and radiates it in a very narrow beam. This is different than the RF antenna shaping in that this is very direct and is Point to Point to the other microwave dish. This can best be simulated as a flashlight where it is a very narrow beam that can only be seen by the end user (i.e. the MW dish at the other end).
>
> All RF being transmitted out of our cell locations is classified as non-ionizing radiation. This falls into the same category as visible and infrared light. We follow all guidelines issued by the FCC and are in compliant with the OET65 safety requirements.

The proposed site is necessary to distribute wireless internet service to the homes and businesses in the area.

The site will require one technician on a once per month visit after construction for maintenance. The proposed project will not utilize connection to any water system, refuse collection, or sewer system.

This development will not affect any vehicular or pedestrian patterns. The communication site does not emit any odor, dust, gas, noise, vibration, smoke, heat or glare. The RF emissions from this site are well within FCC guidelines for a wireless communication site.

The proposed site will not cause any deterioration to the surrounding areas. The proposed site will not be in conflict with the goals, objectives and policies of the City. This site will also be compatible existing surrounding structures.

The proposed site is located on an existing APS power pole with related ground equipment inside substation walls. The proposed site is intended to minimize the visual impact to the neighboring residential. This site is in the middle of the substation and surrounded by other existing power poles4. The proposed site is surrounded by the following zonings.

Current zoning:	**I-1 & I-2**
Zoning to North:	IND-3
Zoning to East:	I-2
Zoning to South:	PCC-1
Zoning to West:	I-2

If you have any comments or concerns, please contact Rulon at 602-321-4903.

Sincerely,

Rulon Anderson

clearwire
wireless broadband

SITE NAME: APS BUTTE
SITE #: AZ-PHX0509B
CITY: TEMPE
STATE: ARIZONA
COUNTY: MARICOPA
DESIGN TYPE: COLOCATION ON UTILITY MONOPOLE

PROJECT INFORMATION

ADDRESS
1406 E. UNIVERSITY DRIVE
TEMPE, AZ 85281

COORDINATES
LATITUDE: 33.422889°
LONGITUDE: -111.916361°

LANDLORD
ARIZONA PUBLIC SERVICE
PO BOX 53999, ST. A 9505
PHOENIX, AZ 85072

LAND DESCRIPTION OF SUBJECT PARCEL
ZONING: I-1 / I-2
APN: 132-33-001-D

PROJECT OWNER
CLEARWIRE
4013 E. BROADWAY ROAD, SUITE A-1
PHOENIX, AZ. 85040

APPLICANT / CONTACT
REA LAND CONSULTING
3523 E. PRESIDIO CIRCLE
MESA, AZ. 85213
PHONE: (602) 321-4903

PROJECT INFORMATION
CONSTRUCTION TYPE. II-B
OCCUPANCY U

PROJECT DESCRIPTION
PROPOSED NEW CLEARWIRE EQUIPMENT CABINET MOUNTED TO NEW EQUIPMENT PLATFORM. ADDITION OF PROPOSED NEW ANTENNAS MOUNTED TO EXISTING UTILITY POLE

CONSULTING TEAM

ARCHITECT
YOUNG DESIGN CORP
10245 E VIA LINDA #211
SCOTTSDALE, AZ 85258
CONTACT: JOHN SULTZBACH
PHONE: (480) 451-9609

PROJECT MANAGER
CHRISTINE TUCKER
4013 E. BROADWAY ROAD, SUITE A-1
PHOENIX, AZ 85040
PHONE: (480) 593-0921

CONSTRUCTION MANAGER
BIFF SLAVIN
4013 E. BROADWAY ROAD, SUITE A-1
PHOENIX, AZ 85040
PHONE: (602) 451-2433

SITE ACQUISITION
TAYLOR CANDLAND
REA LAND CONSULTING
PHONE: (480) 235-5240

ZONING
RULON ANDERSON
REA LAND CONSULTING
PHONE: (602) 321-4903

RF ENGINEER
ENRICO SAN AUGUSTINE
4013 E. BROADWAY ROAD, SUITE A-1
PHOENIX, AZ. 85040
PHONE: (515) 614-0888

SURVEYOR
WESTERN GEOMATICS SERVICES
767 E. PONY LANE
GILBERT, AZ 85295
CONTACT: JEFF COOK
PHONE: (480) 656-7912

SPECIAL INSPECTIONS
T.B.D.

BUILDING CODES
2006 IBC
2006 IMC
2008 NEC

INDEX OF DRAWINGS

NUMBER	NAME OF SHEET	REV.
T-1	TITLE PAGE	0
LS-1	SURVEY	0
C-1	SITE PLAN	0
C-2	COMPOUND DRAWING	0
C-3	ELEVATIONS	0
C-4	DETAILS	0

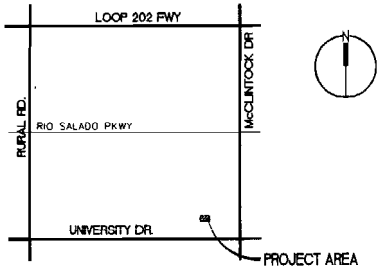

DIRECTIONS TO SITE
TAKE LOOP 202 EAST, EXIT SCOTTSDALE ROAD SOUTH. SCOTTSDALE ROAD BECOMES RURAL ROAD. PROCEED SOUTH TO UNIVERSITY DRIVE, TURN LEFT (EAST) ON UNIVERSITY TO SITE

clearwire
wireless broadband

PLANS PREPARED BY
young design corp
architecture / project management
10245 E Via Linda, Scottsdale, AZ 85258
ph: 480 451 9609 fax: 480 451 9608
e mail corp@ydcoffice.com

SEAL
This drawing is copyrighted and the property of Young Design Corporation (YDC) & produced solely by YDC and affiliates. reproduction or use of this drawing and/or the information contained hereon is forbidden without written permission by Young Design Corporation.

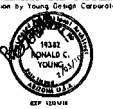

EXP 12/31/10

THIS DOCUMENT CONTAINS AN ELECTRONIC SIGNATURE PURSUANT TO A.R.S. TITLE 41 AND TITLE 44 IT IS A VIOLATION FOR ANY PERSON UNLESS UNDER THE DIRECT SUPERVISION OF THE REGISTRANT, TO MODIFY THIS DOCUMENT IN ANY WAY

PRELIMINARY UNLESS SIGNED

NO.	DATE	DESCRIPTION
0	12/22/09	REVIEW
1	12/28/09	SUBMITTAL
2	2/3/10	RE-SUBMITTAL

ARCHITECTS JOB NO
1730

PROJECT INFORMATION
AZ-PHX0509B
APS BUTTE
1406 E. UNIVERSITY DR.
TEMPE, AZ 85281

SHEET TITLE
PROJECT INFORMATION

JURISDICTION APPROVAL

SHEET NUMBER
T1

ATTACHMENT 5

ATTACHMENT 6

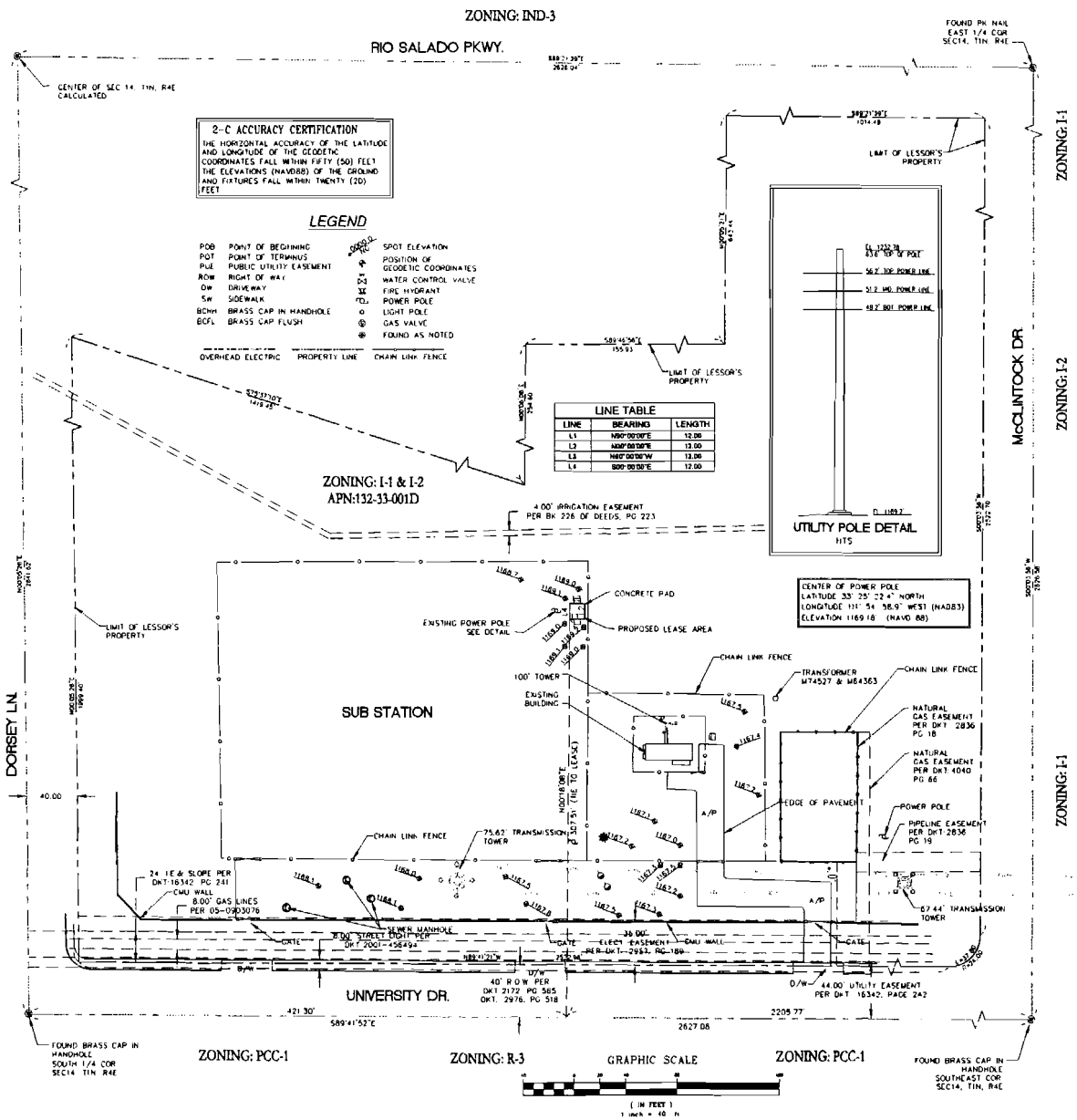

LESSOR'S LEGAL DESCRIPTION

ALL OF THE SOUTHEAST QUARTER (SE 1/4) OF SECTION 14, TOWNSHIP 1 NORTH, RANGE 4 EAST OF THE GILA AND SALT RIVER BASE AND MERIDIAN, MARICOPA COUNTY, ARIZONA
EXCEPT
THAT PORTION OF THE SOUTHEAST QUARTER (SE1/4) OF SECTION 14, TOWNSHIP 1 NORTH, RANGE 4 EAST OF THE GILA AND SALT RIVER BASE AND MERIDIAN, MORE PARTICULARLY DESCRIBED AS FOLLOWS
BEGINNING AT THE NORTHWEST CORNER OF SAID SOUTHEAST QUARTER OF SAID SECTION 14;
THENCE SOUTH 89 DEGREES 09 MINUTES 47 SECONDS EAST ALONG THE NORTH LINE THEREOF A DISTANCE OF 1571.37 FEET;
THENCE SOUTH 00 DEGREES 17 MINUTES 13 SECONDS WEST A DISTANCE OF 883.44 FEET;
THENCE NORTH 89 DEGREES 35 MINUTES 04 SECONDS WEST A DISTANCE OF 155.93 FEET;
THENCE SOUTH 00 DEGREES 18 MINUTES 00 SECONDS WEST 254.60 FEET;
THENCE NORTH 75 DEGREES 25 MINUTES 18 SECONDS WEST A DISTANCE OF 1450.39 (FEET) TO A POINT ON THE WEST LINE OF SAID SOUTHEAST QUARTER OF SECTION 14;
THENCE NORTH 00 DEGREES 40 MINUTES 47 SECONDS WEST A DISTANCE OF 594.63 FEET TO THE POINT OF BEGINNING.
THE WEST 40 FEET OF THE SOUTHEAST QUARTER OF SECTION 14, TOWNSHIP 1 NORTH, RANGE 4 EAST OF THE GILA AND SALT RIVER BASE AND MEDIAN, MARICOPA COUNTY, ARIZONA.

LEASE AREA LEGAL DESCRIPTION

A PORTION OF THE SOUTHEAST QUARTER OF SECTION 14, TOWNSHIP 1 NORTH, RANGE 4 EAST OF THE GILA AND SALT RIVER BASE AND MERIDIAN, MORE PARTICULARLY DESCRIBED AS FOLLOWS.
COMMENCING AT THE SOUTH 1/4 CORNER OF SECTION 14;
THENCE SOUTH 89 DEGREES 41 MINUTES 52 SECONDS EAST, A DISTANCE OF 421.30 FEET;
THENCE NORTH 00 DEGREES 18 MINUTES 08 SECONDS EAST, A DISTANCE OF 307.51 FEET TO THE POINT OF BEGINNING.

THENCE NORTH, A DISTANCE OF 12.00 FEET;
THENCE EAST, A DISTANCE OF 12.00 FEET;
THENCE SOUTH, A DISTANCE OF 12.00 FEET;
THENCE WEST, A DISTANCE OF 12.00 FEET TO THE POINT OF BEGINNING

RESERVING NONEXCLUSIVE RIGHT OF USE ACROSS LESSORS PROPERTY FOR NECESSARY APPURTENANCES TO CONSTRUCT, OPERATE, AND MAINTAIN A RADIO COMMUNICATION FACILITY FOR ITEMS SUCH AS, BUT NOT LIMITED TO INGRESS, EGRESS, PARKING, VEHICULAR MANEUVERING, EQUIPMENT, AND UTILITIES

LEGAL DESCRIPTIONS

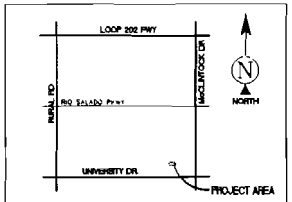

DIRECTIONS TO SITE

TAKE SR-51 SOUTH TO LOOP 202 EAST EXIT SCOTTSDALE ROAD SOUTH SCOTTSDALE ROAD BECOMES RURAL ROAD BRIDGED SOUTH TO UNIVERSITY DRIVE, TURN LEFT (EAST) ON UNIVERSITY TO SITE

VICINITY MAP - N.T.S.

BENCHMARK

ELEVATION ESTABLISHED FROM GPS DERIVED ORTHOMETRIC HEIGHTS, APPLYING GEOID 99 SEPARATIONS CONSTRAINING TO NGS CONTROL STATION COSA, ELEVATION 1383.8' NAVD88.

BASIS OF BEARINGS

BEARINGS SHOWED HEREON ARE BASED UPON U.S. STATE PLANE NAD83 COORDINATE SYSTEM ARIZONA CENTRAL ZONE, DETERMINED BY GPS OBSERVATIONS

SURVEY DATE

12/10/09

SURVEYOR'S NOTES

REFERENCE IS MADE TO THE TITLE REPORT ORDER #APINAS0081, ISSUED BY CANO AND TITLE RESEARCH, LLC INSURANCE COMPANY, DATED NOVEMBER 9, 2009.
ALL EASEMENTS CONTAINED WITHIN SAID TITLE REPORT AFFECTING THE IMMEDIATE AREA SURROUNDING THE LEASE HAVE BEEN PLOTTED (EXCEPT FOR ROOFTOPS). SURVEYOR HAS NOT PERFORMED A SEARCH OF PUBLIC RECORDS TO DETERMINE ANY DEFECT IN TITLE ISSUED
THE BOUNDARY SHOWN HEREON IS PLOTTED FROM RECORD INFORMATION AND DOES NOT CONSTITUTE A BOUNDARY SURVEY OF THE PROPERTY.

UTILITY NOTES

SURVEYOR DOES NOT GUARANTEE THAT ALL UTILITIES ARE SHOWN OR THEIR LOCATIONS. IT IS THE RESPONSIBILITY OF THE CONTRACTOR AND DEVELOPER TO CONTACT BLUE STAKE, AND ANY OTHER INVOLVED AGENCIES TO LOCATE ALL UTILITIES PRIOR TO CONSTRUCTION. REMOVAL, RELOCATION AND/ OR REPLACEMENT IS THE RESPONSIBILITY OF THE CONTRACTOR.

PROJECT INFORMATION

clearwire
wireless broadband

PLANS PREPARED BY

Western Geomatics Services
767 E. PONY LANE
GILBERT, ARIZONA 85295
OFFICE- (480) 858-7012
FAX- (480) 218-9985

SEAL

This drawing is copyrighted and the property of Western Geomatics Services (WGS) & produced solely by WGS and affiliates. reproduction or use of this drawing and/or the information contained hereon is forbidden without written permission by Western Geomatics Services

NO	DATE	DESCRIPTION	BY
0	12/18/09	REVIEW	
1	1/27/10	TITLE REVIEW	

WGS JOB NO.

WGS4554

PROJECT INFORMATION

AZ-PHX0509B

APS BUTTE

1408 E. UNIVERSITY DR.
TEMPE, AZ 85281

SHEET TITLE

JURISDICTION APPROVAL

SHEET NUMBER

LS-1

ATTACHMENT 7

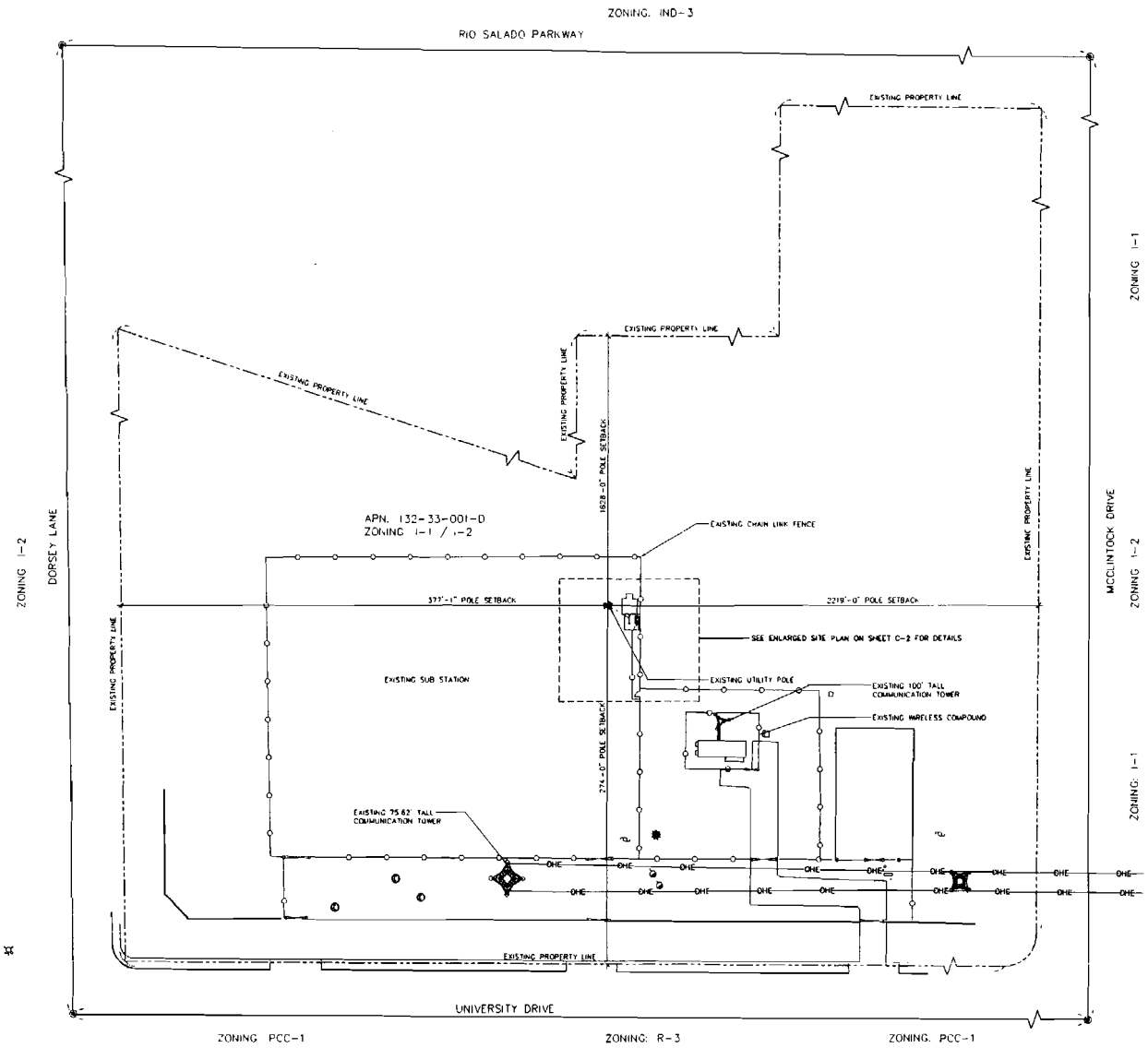

NORTH

0° 90° 180°

0 20' 40' 80'

SCALE: 1" = 40'-0"

SITE PLAN

1

clearwire
wireless broadband

PLANS PREPARED BY

young design corp

architecture / project management
10245 E. Via Linda, Scottsdale, AZ 85258
ph: 480 451 9609 fax 480 451 9608
e mail: corp@ydcoffice.com

SEAL
This drawing is copyrighted and the property of Young Design Corporation (YDC) & produced solely by YDC and affiliates. reproduction or use of this drawing and/or the information contained hereon is forbidden without written permission by Young Design Corporation.

19392 RONALD C. YOUNG 7/5/10 ARIZONA U.S.A.

EXP 12/31/10

THIS DOCUMENT CONTAINS AN ELECTRONIC SIGNATURE PURSUANT TO A.R.S. TITLE 41 AND R(5)C 44.1.15 IS A MISDEMEANOR FOR ANY PERSON UNLESS UNDER THE DIRECT SUPERVISION OF THE REGISTRANT, TO MODIFY THIS DOCUMENT IN ANY WAY

PRELIMINARY UNLESS SIGNED

NO.	DATE	DESCRIPTION
0	12/22/09	REVIEW
1	12/28/09	SUBMITTAL
2	2/3/10	RE-SUBMITTAL

ARCHITECTS JOB NO

1730

PROJECT INFORMATION

AZ-PHX0509B

APS BUTTE

1406 E. UNIVERSITY DR.
TEMPE, AZ 85281

SHEET TITLE

SITE PLAN

JURISDICTION APPROVAL

SHEET NUMBER

C1

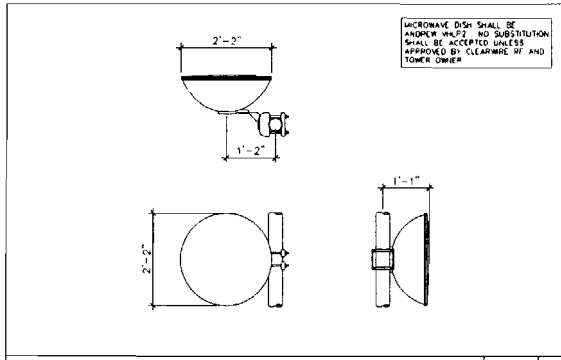

MICROWAVE DISH | SCALE NTS | 2

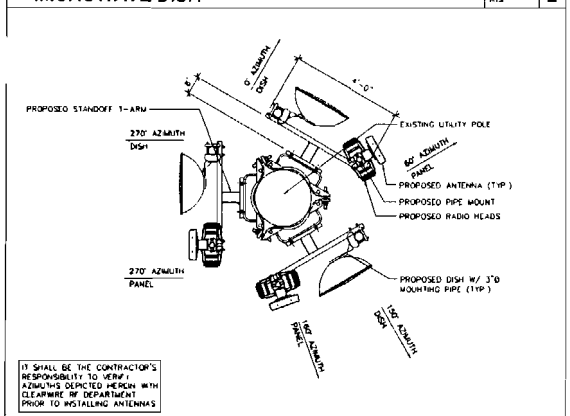

ANTENNA LAYOUT & DETAIL | SCALE NTS | 3

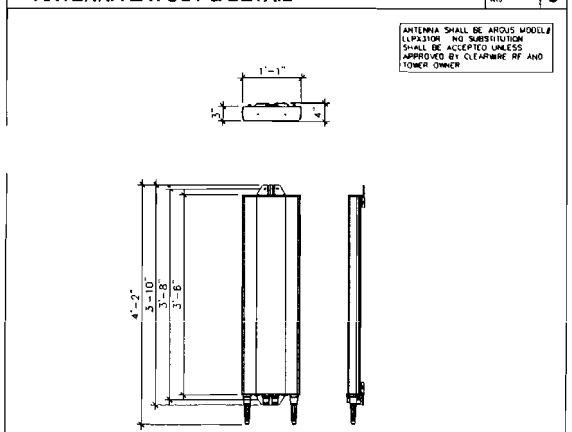

ANTENNA | SCALE NTS | 4

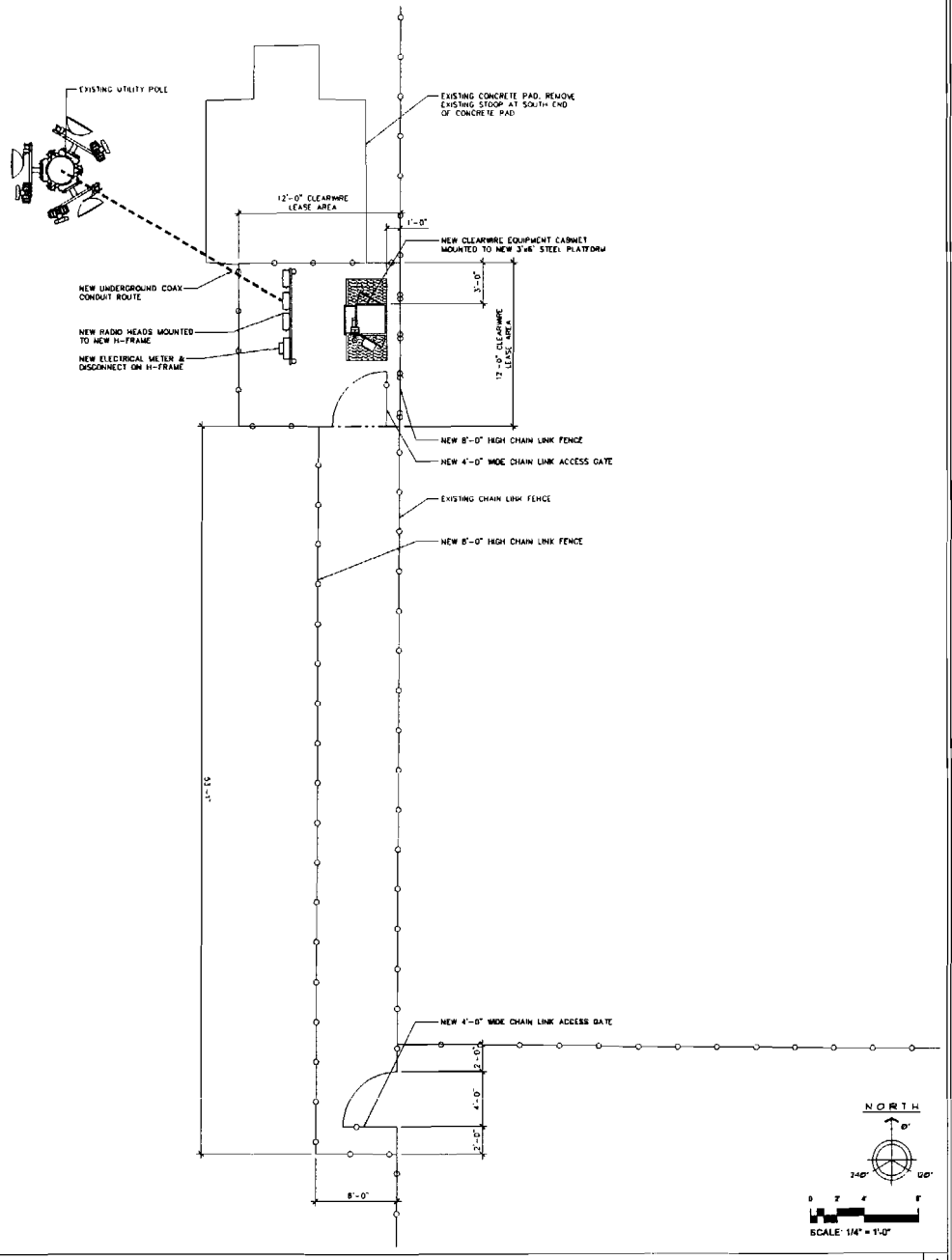

ENLARGED SITE PLAN | 1

clearwire
wireless broadband

PLANS PREPARED BY

young design corp

architecture / project management
10245 E. Via Linda, Scottsdale, AZ 85258
ph. 480 451 9609 fax. 480 451 9608
e mail corp@ydcoffice.com

SEAL

This drawing is copyrighted and the property of Young Design Corporation (YDC) & produced solely by YDC and affiliates. reproduction or use of this drawing and/or the information contained herein is forbidden without written permission by Young Design Corporation.

19382 RONALD C. YOUNG 7/03/09 ARIZONA, U.S.A.

EXP 7/30/10

THIS DOCUMENT CONTAINS AN ELECTRONIC SIGNATURE PURSUANT TO A.R.S. TITLE 41 AND TITLE 44 11.15 & RELEASED FOR ANY PERSON UNLESS UNDER THE DIRECT SUPERVISION OF THE REGISTRANT TO WHOSE THIS DOCUMENT BE ANY WAY

PRELIMINARY UNLESS SIGNED

NO.	DATE	DESCRIPTION
0	12/22/09	REVIEW
1	12/28/09	SUBMITTAL
2	2/3/10	RE-SUBMITTAL

ARCHITECTS JOB NO.

1730

PROJECT INFORMATION

AZ-PHX0509B

APS BUTTE

1408 E. UNIVERSITY DR.
TEMPE, AZ 85281

SHEET TITLE

ENLARGED PLAN

JURISDICTION APPROVAL

SHEET NUMBER

C2

ATTACHMENT 8

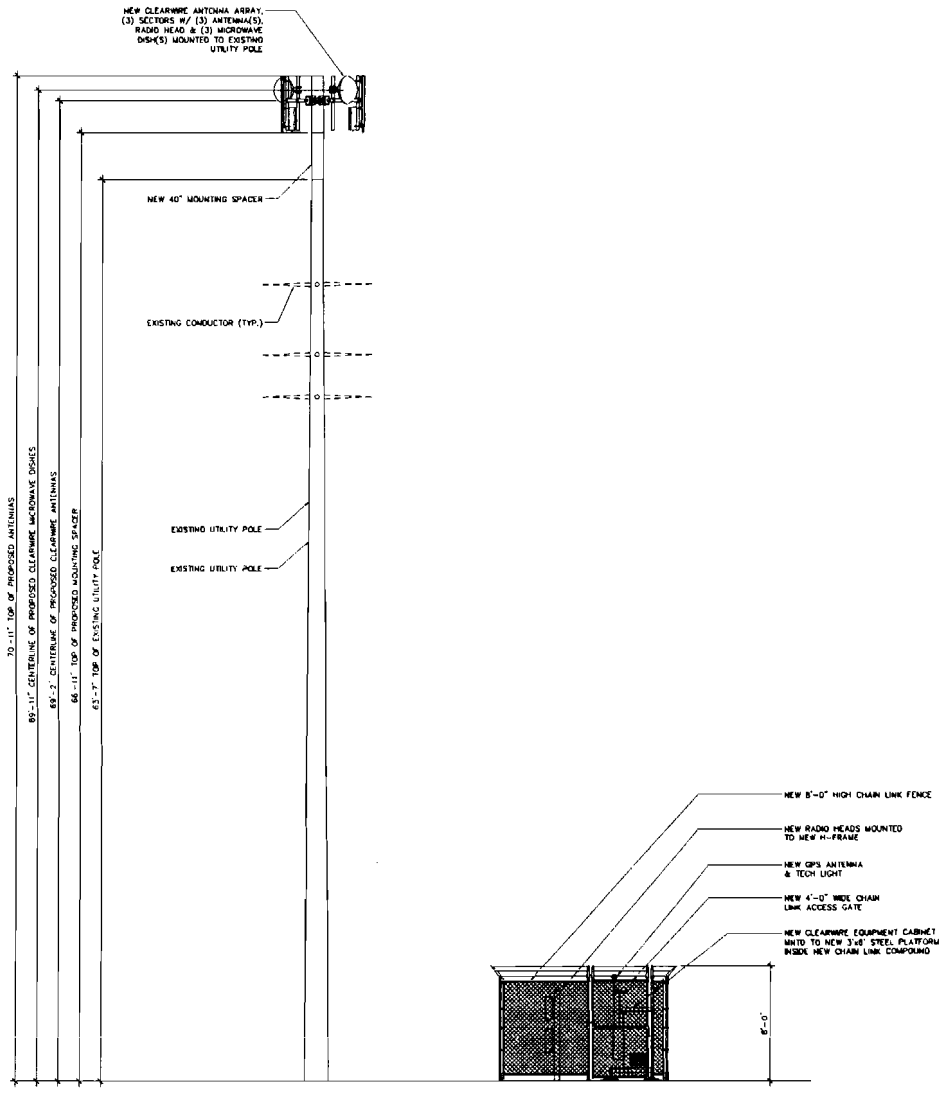

SOUTH ELEVATION

SCALE: 1/4" = 1'-0"

SITE ELEVATION

ATTACHMENT 9

clearwire
wireless broadband

PLANS PREPARED BY

young design corp

architecture / project management
10245 E. Via Linda, Scottsdale, AZ 85258
ph: 480 451 9609 fax: 480 451 9608
e mail: corp@ydcoffice.com

SEAL

This drawing is copyrighted and the property of Young Design Corporation (YDC) & produced solely by YDC and affiliates. reproduction or use of this drawing and/or the information contained herein is forbidden without written permission by Young Design Corporation

NO.	DATE	DESCRIPTION
0	12/22/09	REVIEW
1	12/28/09	SUBMITTAL
2	2/3/10	RE-SUBMITTAL

ARCHITECTS JOB NO.

1730

PROJECT INFORMATION

AZ-PHX0509B

APS BUTTE

1406 E. UNIVERSITY DR.
TEMPE, AZ 85281

SHEET TITLE

SITE ELEVATION

JURISDICTION APPROVAL

SHEET NUMBER

C3

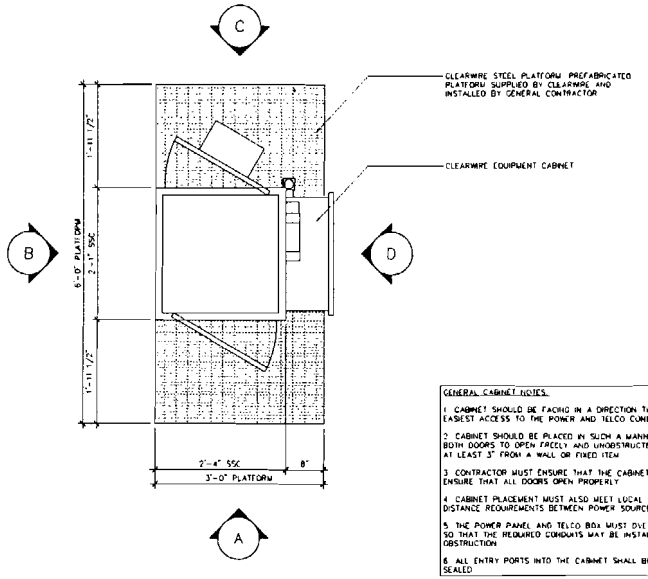

GENERAL CABINET NOTES

1. CABINET SHOULD BE FACING IN A DIRECTION THAT ALLOWS FOR THE EASIEST ACCESS TO THE POWER AND TELCO CONNECTIONS

2. CABINET SHOULD BE PLACED IN SUCH A MANNER THAT ALLOWS FOR BOTH DOORS TO OPEN FREELY AND UNOBSTRUCTED. THE HVAC MUST BE AT LEAST 3" FROM A WALL OR FIXED ITEM

3. CONTRACTOR MUST ENSURE THAT THE CABINET IS PLACED LEVEL AND ENSURE THAT ALL DOORS OPEN PROPERLY

4. CABINET PLACEMENT MUST ALSO MEET LOCAL CODE REQUIREMENTS FOR DISTANCE REQUIREMENTS BETWEEN POWER SOURCES

5. THE POWER PANEL AND TELCO BOX MUST OVERHANG THE PLATFORM SO THAT THE REQUIRED CONDUITS MAY BE INSTALLED WITHOUT OBSTRUCTION

6. ALL ENTRY PORTS INTO THE CABINET SHALL BE PROPERLY WEATHER SEALED

EQUIPMENT PLAN — SCALE: 1"=1'-0" — 1

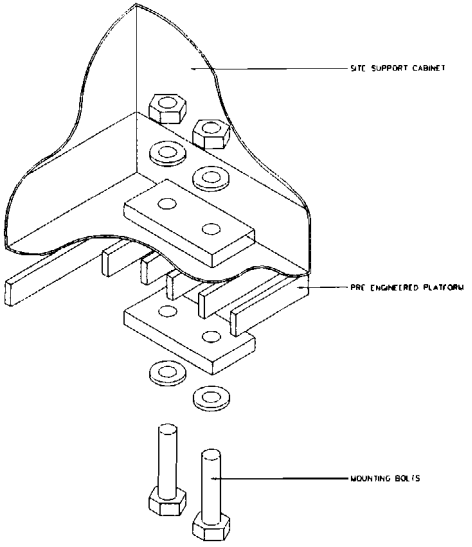

CABINET MOUNTING DETAIL ON GRATING — SCALE N.T.S. — 2

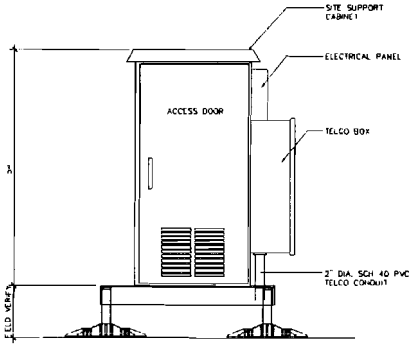

CABINET ELEVATION (FRONT) — SCALE: 1"=1'-0" — A

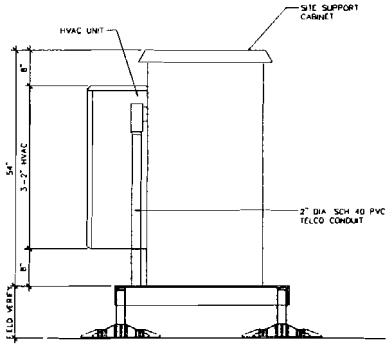

CABINET ELEVATION (LEFT) — SCALE: 1"=1'-0" — B

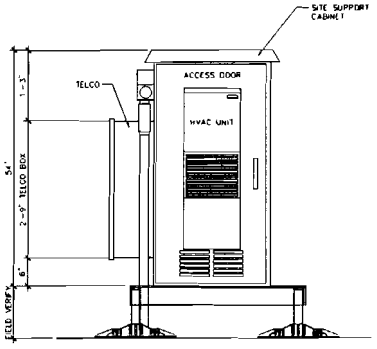

CABINET ELEVATION (BACK) — SCALE: 1"=1'-0" — C

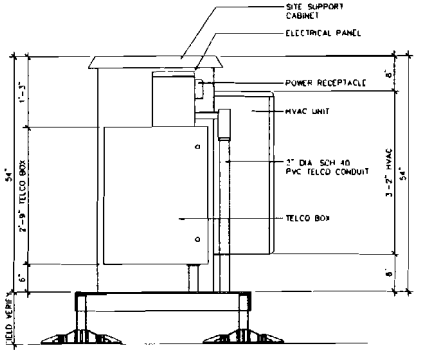

CABINET ELEVATION (RIGHT) — SCALE: 1"=1'-0" — D

clearwire
wireless broadband

PLANS PREPARED BY

young design corp
architecture / project management
10245 E. Via Linda, Scottsdale, AZ 85258
ph. 480 451 9609 fax. 480 451 9608
e mail: corp@ydcoffice.com

SEAL

This drawing is copyrighted and the property of Young Design Corporation (YDC) & produced solely by YDC and affiliates. reproduction or use of this drawing and/or the information contained herein is forbidden without written permission by Young Design Corporation.

19182 RONALD C. YOUNG 7/01/10 ARIZONA U.S.A.

EXP. 12/31/10

THIS DOCUMENT CONTAINS AN ELECTRONIC SIGNATURE PURSUANT TO A.P.S. RULE 41 AND TITLE 44 IT IS A VIOLATION FOR ANY PERSON UNLESS UNDER THE DIRECT SUPERVISION OF THE REGISTRANT, TO MODIFY THIS DOCUMENT IN ANY WAY

PRELIMINARY UNLESS SIGNED

NO.	DATE	DESCRIPTION
0	12/22/09	REVIEW
1	12/28/09	SUBMITTAL
2	2/3/10	RE-SUBMITTAL

ARCHITECTS JOB NO.

1730

PROJECT INFORMATION

AZ-PHX0509B

APS BUTTE

1406 E. UNIVERSITY DR.
TEMPE, AZ 85281

SHEET TITLE

TYPICAL EQUIPMENT DETAILS

JURISDICTION APPROVAL

SHEET NUMBER

C4

clearwire
wireless broadband

PROPOSED SITE CANDIDATE

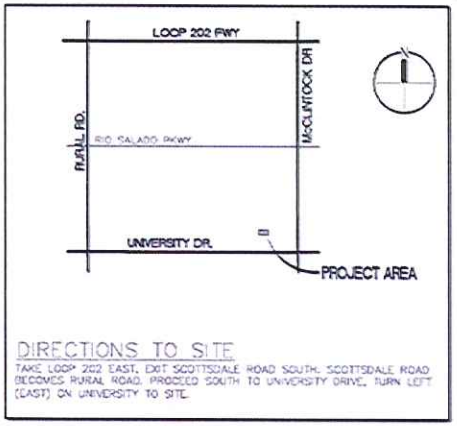

SITE CANDIDATE MODIFICATION

AZ-PHX0509B

APS BUTTE

1406 E.
~~1658 W.~~ UNIVERSITY DR.
TEMPE, AZ 85281

young design corp
architecture / project management
10245 E. Via Linda, Scottsdale, AZ 85258
ph: 480 451 9609 fax: 480 451 9608

PHOTOGÉ
SIMULATIONS

ATTACHMENT 11

CLEARWIRE – AZ – PHX0509B – APS BUTTE

1406 EAST UNIVERSITY DRIVE

PL090491

EXISTING MONOPOLE LOCATION