Staff Summary Report

Tempe

Council Meeting Date: 05/15/08 **Agenda Item Number:** _____

SUBJECT: Request authorization for the Mayor to sign Amendment #4 to an intergovernmental agreement with Arizona State University to design and construct bus stop improvements.

DOCUMENT NAME: 20080515PWRY01 **BUS BENCHES / SHELTERS / BUS BAYS (1107)**

SUPPORTING DOCS: No

COMMENTS: **Intergovernmental Agreement C93-195.** City's contribution in this Amendment is $188,000.00 while ASU will provide $70,000.00 to assist in the completion of this project.

PREPARED BY: Robert Yabes, Principal Planner (x2734)

REVIEWED BY: Carlos de Leon, Deputy PW Manager (x8527)

APPROVED BY: Glenn Kephart, Public Works Manager (x8205)

LEGAL REVIEW BY: Teresa Voss, Assistant City Attorney (x8814)

FISCAL NOTE: Sufficient funds are available in Capital Improvement Fund 6749.

RECOMMENDATION: Recommend Approval.

ADDITIONAL INFO: This Intergovernmental Agreement (IGA) continues the on-going cooperation between the City and ASU in providing for the transit needs of ASU students and staff, which make up a significant portion of our transit riders. This agreement allows the City of Tempe and ASU to cooperatively design and construct 10 bus shelters at high boarding areas where there is limited City right-of-way and one (1) bus pullout on city right-of-way adjacent to ASU Tempe Campus. ASU will also provide the required right-of-way easements and the shelter concrete pads to complete the installation of the bus shelters. The total cost of this project is $258,000.00, with the City contributing $188,000.00 and ASU contributing $70,000.00.

AMENDMENT NO. 4 TO AGREEMENT NO. C93-195

CITY OF TEMPE, ARIZONA
PUBLIC WORKS DEPARTMENT

INTERGOVERNMENTAL AGREEMENT BETWEEN THE CITY OF TEMPE AND ARIZONA STATE UNIVERSITY FOR THE IMPLEMENTATION OF IMPROVEMENTS OF BUS STOPS IN AND AROUND ASU TEMPE CAMPUS

THIS AMENDMENT NO. 4 TO AGREEMENT NO. C93-195 (the "Agreement") is made and entered into the ____ day of _____, 2008, by and between the City of Tempe, a municipal corporation duly organized and existing under the laws of the state of Arizona (hereinafter referred to as "Tempe") and the Arizona Board of Regents, duly organized and existing under the laws of the state of Arizona, for and on behalf of Arizona State University (hereinafter referred to as "ASU").

WHEREAS, on October 26, 1994, the parties entered into Intergovernmental Agreement No. C93-195, which was amended on July 1, 1999, July 1, 2004, and July 1, 2005 (hereinafter referred to collectively as the "Principal Agreement"), to provide Free Local Area Shuttle ("FLASH") service; and,

WHEREAS, the parties wish to establish a program referred to as the "ASU Tempe Transit Service and Facilities Improvement Program" to extend the scope of bus services to include improvements of bus stops in and around ASU Tempe campus (hereinafter "Program"); and,

WHEREAS, the parties wish to enter into this Agreement to add to and amend the Principal Agreement to: (1) implement the Program; and (2) revise the cost to include reimbursement of construction of the transit service and facilities improvements, as contained in this Agreement.

NOW THEREFORE, IT IS HEREBY AGREED, by and between the parties, as follows:

1. Term: Pursuant to this Agreement, the Program will commence on _____ 1, 2008, for a term of one (1) year, ending on or before _____ 31, 2009. The Agreement can be renewed on an annual basis for five (5) consecutive years, upon the mutual written consent of the parties.
2. Cost: Pursuant to this Agreement, for the first year of the Program, Tempe will compensate ASU $188,000.00 including contingencies not to exceed $20,000.00, for the services as set forth in *Schedule C*, attached hereto and incorporated herein by this reference. Annual renewal of this Agreement following the initial Term set forth herein, shall include a review of the cost and scope of the services to be provided for the year by Tempe.
3. Payment: Pursuant to *Schedule C* of this Agreement, ASU shall receive payment per the list set forth therein, by way of a single lump sum payment for reimbursement of

actual costs for each bus stop location. Payment shall be due and payable subsequent to Tempe's approval of completion of the improvements at each bus stop location. Tempe's review of completed improvements shall be performed within thirty (30) days following receipt of written invoice(s) from ASU, including underlying documentation as requested by Tempe.

4. It is contemplated by ASU and Tempe that the bus stop locations for this Project are located in the right-of-way(s) owned by Tempe. However, in the event that any of the bus stop locations referenced herein are located on State of Arizona and/or ASU property that may be or may become physically impossible or impracticable to access to complete Tempe's responsibilities pursuant to this Project, ASU agrees and covenants to extend non-exclusive license(s) and/or easements to Tempe to access such locations to facilitate completion of the Project. Should additional agreements be required, ASU and Tempe hereby agrees to cooperate toward the implementation of such agreements, including but not limited to, construction easement(s), a permanent easement(s) and/or maintenance easement(s), relating to the portions of the Project located on ASU property.
5. Nothing in this Agreement shall be construed to establish a joint venture, agency, employment or partnership between the parties.

6. Tempe shall be entitled to terminate this Agreement at any time, in its discretion. In the event of termination for ASU's material breach of the Agreement, Tempe shall be entitled to retain all compensation paid to the date of termination. Regardless of termination under this or any other provision of this Agreement, Tempe shall be entitled, in its discretion, to continue, discontinue, modify, or change its plans regarding any projects. This Agreement is subject to termination for conflict of interest pursuant to A.R.S. § 38-511.

7. Without limiting any of their obligations or liabilities, ASU, at its own expense, shall purchase and maintain the minimum insurance specified below with companies duly licenses or otherwise approved by the State of Arizona, Department of Insurance, and with forms reasonably satisfactory to Tempe. Each insurer shall have a current A.M. Best Company, Inc. rating of not less than A-. Use of alternative insurers requires prior approval from Tempe.

A. General Clauses

1. Additional Insured. The insurance coverage, except Workers' Compensation and Professional Liability, required by this Agreement, shall name Tempe, its agents, representatives, directors, officials, and employees, as additional insured, and shall specify that insurance afforded ASU shall be primary insurance, and that any self insured retention and/or insurance coverage carried by Tempe or its employees shall be excess coverage, and not contributory coverage provided by ASU.
2. Coverage Terms. All insurance required herein shall be maintained in full force and effect until the services required to be performed under the terms of this Agreement are satisfactorily completed and formally accepted; failure to do so may constitute as material beach of this Agreement, at the sole discretion of Tempe.

3. Primary Coverage. ASU's insurance shall be primary insurance with respect to Tempe and any insurance or self insurance maintained by Tempe shall be excess of ASU's insurance and shall not contribute to it.
4. Claim Reporting. Any failure to comply with the claim reporting provisions of the policies or any breach of a policy warranty shall not affect coverage afforded under the policy to protect Tempe.
5. Waiver. The policies, except Worker's Compensation and Professional Liability, shall contain a waiver of transfer of rights of recovery (subrogation) against Tempe, its agents, representatives, directors, officers, and employees for any claims arising out of the work of ASU.
6. Deductible/Retention. The policies may provide coverage which contains deductibles or self-insured retentions. Such deductible or self insured retentions shall not be applicable with respect to the coverage provided to Tempe under such policies. ASU shall be solely responsible for deductible or self insured retentions and Tempe may require ASU to secure payment of such deductible or self insured retentions by a surety bond or an irrevocable and unconditional letter of credit.
7. Policies and Endorsements. Tempe reserves the right to request and to receive, within 10 working days, certified copies of any or all of the above policies or endorsements. Tempe shall not be obligated, however, to review same or to advise ASU of any deficiencies in such policies, and such receipt shall not relieve ASU from, or be deemed a waiver of Tempe's right to insist on, strict fulfillment of ASU's obligations under this Agreement.
8. Certificates of Insurance. Prior to commencing services under this Agreement, ASU shall furnish Tempe with Certificates of Insurance, or formal endorsements as required by the Agreement, issued by ASU's insurer(s), as evidence that policies providing the required coverages, conditions, and limits required by this Agreement are in full force and effect.

B. Workers' Compensation

ASU shall carry Worker's Compensation insurance to cover obligations imposed by federal and state statutes having jurisdiction of ASU employees engaged in the performance of the services; and Employer's Liability insurance of not less than $100,000 for each accident, $100,000 disease for each employee, and $500,000 disease policy limit.

In case services are subcontracted, ASU will require the subcontractor(s) to provide Workers' Compensation and Employer's Liability to at least the same extent as provided by ASU.

C. Automobile Liability

ASU shall carry Commercial/Business Automobile Liability insurance with a combined single limit for bodily injury and property damages of not less than $1,000,000, each occurrence regarding any owned, hired, and non-owned vehicles assigned to or used in performance of ASU's services. Coverage will be at least as broad as cover Code 1 "any

auto" (Insurance Service Office policy form CA 0001 1/87 or any replacements thereof). Such coverage shall include coverage for loading and unloading hazards.

D. Commercial General Liability

ASU shall carry Commercial General Liability insurance with unimpaired limit of not less than $1,000,000 for each claim with a $2,000,000 General Aggregate limit. The general aggregate limit shall apply separately to the services under this Contract or the general aggregate shall be twice the required per claim limit. The policy shall be primary and include operations, and blanket contractual covering, but not limited to, the liability assumed under the indemnification provisions of this Contract which coverage will be at least as broad as Insurance Service Office policy form CG 0002 1-11-88 or any replacement thereof.

In the event the general liability insurance policy is written on a "claims made" basis, coverage shall extend for two years past completion and acceptance of the services as evidenced by annual Certificates of Insurance. Such policy shall contain a "severability of interests provision (aka "Cross liability" and "separation of insured").

8. To the fullest extent permitted by law, ASU shall defend, indemnify and hold harmless Tempe, its agents, officers, officials, assigns and employees from and against all claims, damages, losses, and expenses, including but not limited to attorney's fees and costs, relating to, arising out of acts, errors, mistakes, omissions, work or services of ASU, its agents, employees and assigns, and/or relating to this Agreement.

9. ASU and Tempe agree to comply with all applicable state and federal laws, rules, regulations, and executive orders (including without limitation, Arizona Executive Order No. 75-5, entitled "Prohibition of Discrimination in State Contracts-Non-Discrimination in Employment by Government Contractors and Subcontractors" which by this reference is incorporated herein and made a part hereof) governing equal employment opportunity, immigration, nondiscrimination, and affirmative action.

10. ASU shall not assign its rights to this Agreement, in whole or in part, without prior written approval of Tempe.

11. No modifications of this Agreement shall be made without the written consent of both parties.

12. Pursuant to this Agreement, the description, duties and roles of ASU and Tempe described in *Schedule C* are incorporated herein by this reference and made a part hereof.

13. To the extent not inconsistent herewith, all the rest, residue and remainder of the terms of the Principal Agreement shall remain in full force and effect except as herein specifically amended.

14. The parties agree to cooperate in good faith to reasonably complete the obligations set forth in this Agreement.

15. This Agreement shall be governed by the laws of the State of Arizona. Both parties hereby consent to the jurisdiction of the state and federal courts located in Maricopa County, Arizona.

IN WITNESS WHEROF, the parties hereto have executed this Agreement on the day and year first abovementioned.

CITY OF TEMPE, ARIZONA

_____
Hugh Hallman
Mayor

The above Agreement has been reviewed pursuant to Arizona Revised Statutes Section 11-952, by the undersigned attorney for the City of Tempe, Arizona, who has determined that it is in the proper form and is within the powers and authority granted to the City of Tempe.

_____
Judith Morgan
City Attorney
City of Tempe

ATTEST:

_____
Janet R. Hort
City Clerk

ARIZONA BOARD OF REGENTS
for and on behalf of ARIZONA
STATE UNIVERSITY

_____
Ray Jensen
Associate Vice President:
Administration and Business Services

The above Agreement has been reviewed pursuant to Arizona Revised Statutes Section 11-952, by the undersigned attorney for Arizona State University, who has determined that it is in the proper form and is within the powers and authority granted to the granted to Arizona State University.

_____
Lisa Loo
Associate General Counsel
Arizona State University

SCHEDULE C

PROGRAM DESCRIPTION AND AGENCY ROLES AND RESPONSIBILITIES

GENERAL PROVISIONS

PROGRAM DESCRIPTION

The Project is a collaborative effort between Tempe and ASU to jointly improve bus stops located within Tempe, for bus stops and right-of-ways in and around the ASU Tempe Campus. The Project will include design and purchase of bus stop shelters and construction of a bus stop pullout located around the Tempe ASU Campus on and along Tempe streets. In addition, the Project seeks to jointly fund, between Tempe and ASU, bus stop improvements including the design and installation of bus stop shelters, bus shelter concrete pads, and pullouts on and along Tempe streets. As a benefit of the Project, ASU and Tempe shall jointly undertake bus stop improvement projects and share and reduce the individual and total Project costs, as set forth herein.

The Project will include a minimum of ten (10) bus stop shelters, 10 bus stop pads, and one (1) bus pullout to be constructed.

No advertising shall be allowed on the subject bus stop shelters or on any bus stop shelter located in Tempe right-of-ways.

This Project is exclusive of the current Flash service. The Principal Agreement between Tempe and ASU will remain in full force and effect except as specifically amended.

ELIGIBLE BUS STOPS AND SERVICES

This Agreement covers only those existing and proposed bus stops in and around ASU Tempe campus, as set forth on *Exhibit 1*, attached hereto and incorporated herein.

Bus Stop Locations:

The following bus stop locations are covered by this Agreement:

1) Bus Stop – Rio Salado at Northwest End of the Sun Devil Stadium
2) Bus Stop – Northwest corner of Rio Salado and Packard Drive
3) Bus Stop – Southwest Corner of Rio Salado and Packard Drive
4) Bus Stop – Southeast Corner of McAllister Drive and Tyler Street
5) Bus Stop – Northeast Corner of McAllister drive and Orange Street
6) Bus Stop – Southeast Corner of McAllister drive and Orange Street
7) Bus Stop – Southwest Corner of McAllister drive and Lemon Street
8) Bus Stop – Southeast Corner of McAllister drive and Lemon Street
9) Bus Stop – Northeast Corner of McAllister drive and Apache Boulevard
10) Bus Stop – Northwest Corner of McAllister Drive and Apache Boulevard

Bus Pullout Location:
1) Bus pullout located at Southeast Corner of University Drive and College Avenue

General Provisions:

TOTAL COST
The proposed reimbursement cost for the first (1st) year of the Agreement upon the completion of the bus stop improvements as identified herein, shall not exceed $188,000.00 collectively, for the locations identified herein.

The total cost per this Agreement is applicable for the first year of operation, FY 2008 – 2009, and shall not exceed $188,000.00. The cost shall be distributed as follows:

Bus Stop Cost -10 @ $10,000.00 per shelter	**$ 100,000.00**
Bus Pullout Cost-1 @ $68,000.00 per pullout	**$ 68,000.00**
Contingency Cost -	**$ 20,000.00***
Total First Year Cost-	**$ 188,000.00**

*Only expended if additional bus shelters are mutually identified by Tempe and ASU and construction is completed to Tempe's approval on said additional locations.

CONTINGENCY COST - Contingency cost in an amount not to exceed $20,000.00, shall be approved by Tempe in its sole discretion, for the purpose of funding potential bus stop improvement sites in or around the ASU Tempe Campus that are not currently included in the Program. The estimated contingency cost may provide funding for up to two (2) extra bus stops within or around ASU Tempe campus locations to be mutually agreed upon by Tempe and ASU. Contingency cost shall not be due or payable until Tempe's approval of completion of the construction of each location, and following receipt of written invoice(s) from ASU, including underlying documentation as requested by Tempe.

AGENCY RESPONSIBILITIES

TEMPE RESPONSIBILITIES

1. Tempe will reimburse costs up to $10,000.00 per bus stop shelter and bus pad location upon Tempe's approval of the completed improvement(s) at each location, and following receipt and approval of written invoice(s) from ASU, including underlying documentation as requested by Tempe.
2. Each bus stop shelter pad design will be reviewed for approval by Tempe within 14 working days of Tempe's receipt of final submission of the final design and all underlying documentation as needed, provided by ASU.
3. City of Tempe will be responsible for installing the shelters at the 10 specified locations as set forth in this Agreement.
4. Tempe will undertake reasonable steps to assist ASU in securing necessary permits for construction of the bus stop pads.

5. Tempe will perform periodic inspections of each constructed improvement located within Tempe right-of-ways subject to this Agreement. If Tempe determines that, pursuant to applicable construction standards, the improvements require maintenance and/or repairs, Tempe shall notify ASU of such required maintenance and/or repairs. Immediately following receipt of such notification from Tempe, ASU shall undertake maintenance and/or repairs at its sole expense, within ten (10) days. If ASU fails to complete said maintenance and/or repairs within the time set forth herein, Tempe or its authorized agent may perform the authorized maintenance and/or repair. Should Tempe determine that imminent danger exists, Tempe's obligation to provide notice to ASU shall be deemed waived, and Tempe or its authorized agent may immediately initiate maintenance and/or repairs. Any and all costs, expenses and fees incurred by Tempe for maintenance and/or repairs performed by Tempe or at its direction, shall be reimbursed by ASU within ten (10) working days of said performance.
6. Tempe shall keep current transit-related information on the subject bus stop shelters located on the Tempe right-of-ways.
7. Tempe shall be responsible for periodically cleaning the bus stop shelters subject to this Agreement. It is expressly agreed and understood that Tempe is under no obligation to maintain, repair or otherwise upkeep the subject bus shelters, other than as expressly set forth herein.
8. No advertising will be allowed on the bus shelters located on Tempe right-of-ways on the ASU Tempe campus. Panels at these locations may be used for transit-related information only, upon approval from Tempe.

ASU RESPONSIBILITIES

1. ASU shall design and/or purchase approved ASU-style bus stop shelters as shown in Exhibit 2 .
2. ASU shall be responsible for costs and expenses in the amount of $7,000.00 per bus stop shelter.
3. ASU shall construct all supporting infrastructure reasonable and necessary for installation of bus stop shelters; including but not limited to, electrical conduits, cement pads, and otherwise, as requested by Tempe at the locations as set forth herein, in accordance with the City of Tempe construction standards, including but not limited to, ***MAG 2008 Uniform Standard Details for Public Works Construction and MAG 2008 Uniform Standard Specifications for Public Works Construction***. ASU shall comply with all applicable federal, state and local health and safety laws, regulations, ordinances, and requirements in its performance of this Agreement. Prior to undertaking construction, ASU will prepare plans and specifications for the Project subject to approval by Tempe. ASU agrees to cause the Project to be constructed in accordance with the plans, specifications and other requirements as set forth by Tempe, the plans and specifications approved by Tempe and good construction practice. ASU agrees that no construction shall commence prior to approval by Tempe of plans and specifications and other requirements for construction. Approval of any changes in the plans and specifications and other requirements shall be made by Tempe, in its sole discretion.

4. ASU shall secure all necessary permits and provide all required land surveys prior to construction of the bus pads, for each and every subject bus stop location, at its sole expense.
5. ASU shall maintain, upkeep and/or repair all subject bus stop shelters pursuant to this Agreement within ten (10) days of receipt of notification by Tempe or otherwise.
6. ASU is responsible for and shall install, maintain and/or repair all improvement(s) and/or equipment on the subject bus stop shelters, and shall replace any improvement(s) and/or unit(s) of equipment that has suffered irreparable damages within a period of sixty (60) business days from receipt of notice of required maintenance and/or repairs from Tempe or otherwise, at its sole expense. Said installation, repairs and/or replacement shall restore the subject bus stop shelters to like-new condition, or if that is not possible, to an acceptable condition as determined by Tempe, in accordance with applicable construction standards set forth herein.

Exhibit 1
Bus Shelters and Bus Pullout Locations

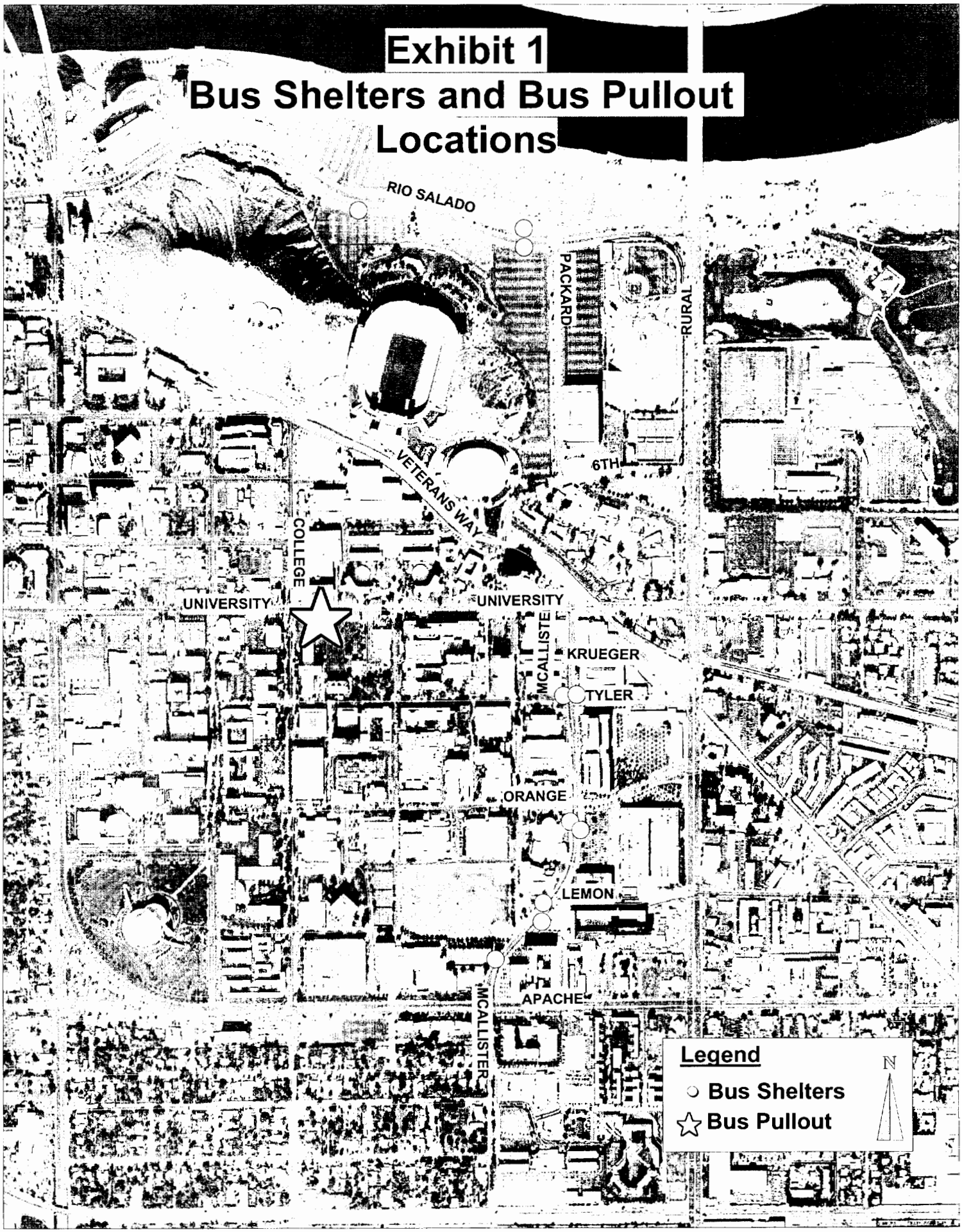

EXHIBIT 2

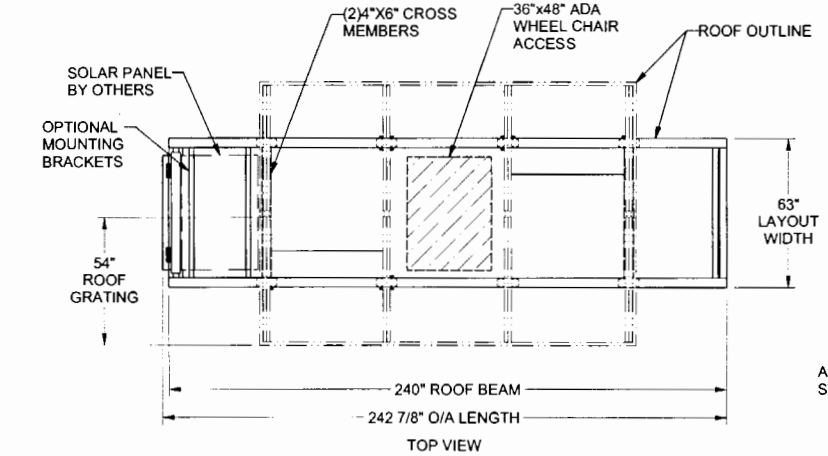

TOP VIEW

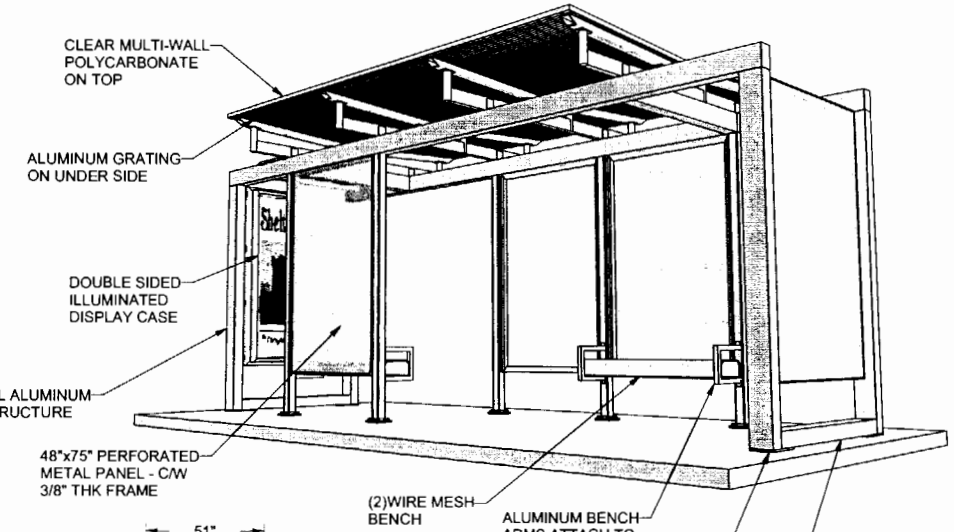

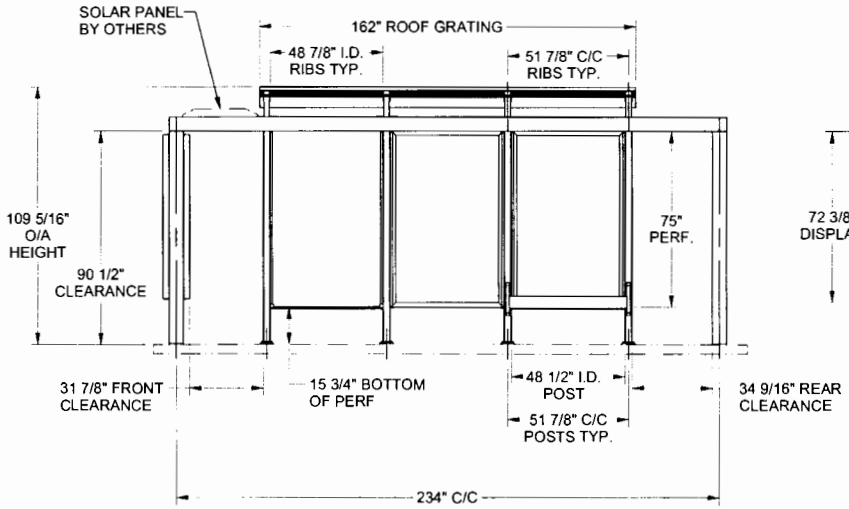

FRONT ELEVATION

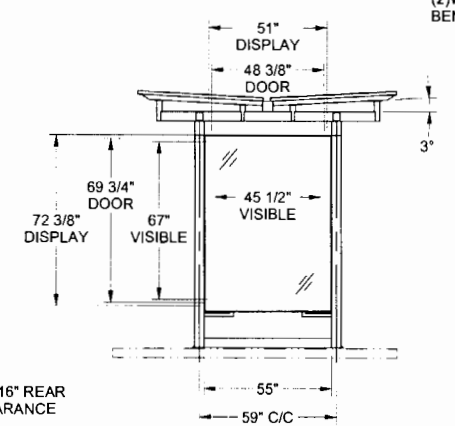

END ELEVATION

NOTE:
-COLOR DAYTECH SILVER

No.	Date	Revision Description	By

Daytech
www.daytechlimited.com

Daytech Limited
70 Disco Road, Suite #101
Toronto ON M9W 1L9
CANADA
Tel: (416) 675-1195
Fax: (416) 675-7183
Toll Free: 1-877-DAY-1907

Daytech Limited will not be held responsible for any measurements or details affecting work other than its own or any errors occuring due to the use of these drawings by parties other than the intended recipients. These drawings remain the property of Daytech Limited, and all rights pertaining to reproduction and dissemination, in part or as a whole, by electronic or any other means, are strictly reserved by Daytech Limited.

Title 5'x20' ARIZONA SHELTER C/W ONE DISPLAY CASE

Drawn By	Date Drawn	Drawing No.	Project No.
EP	1/17/2008	4874-00B	
Checked By	Scale 1:50		